DEEKAX®

# AIR EXHANGE EQUIPMENT
# INSTALLATION AND USER MANUAL

## TALTERI

### DIVK-C 95

**QUALITY CONTROLLED**

*THE QUALITY GOALS OF AIR CONDITIONING COME TRUE WITH THE RECOVERY SYSTEM*

*TALTERI removes used air from interior and brings in fresh air. Humidity and impurities are exhausted through thermal recovery unit that heats the filtered ambient air cost-effectively. The fresh warm air is channelled draught-free and noise-free into the premises in necessary quantities.*

## ENSURE THE QUALITY OF AIR EXCHANGE!

**DEEKAX Air Oy**

Patruunapolku 4 Puh. 0207 912550
79100 LEPPÄVIRTA Fax 0207 912559
Rek.nro 668.346 Ly-tunnus 1038303-3

# TALTERI HEAT RECOVERY AIR VENTILATION SYSTEM (HRV)

**SYSTEM COMPONENTS**

Picture 1

1. Heat recovery ventilator (HRV). DIVK-C 95
2. Exhaust fan hood…… DX-ULTRA PEC
3. Exhaust air outlet……DLVS-125
4. Duct silencer…… Ø125
5. Extract air to the heat recovery ventilator …… …... Ø125
6. Fresh air intake from outdoors .Ø125
7. Fresh air supply to the rooms…Ø125

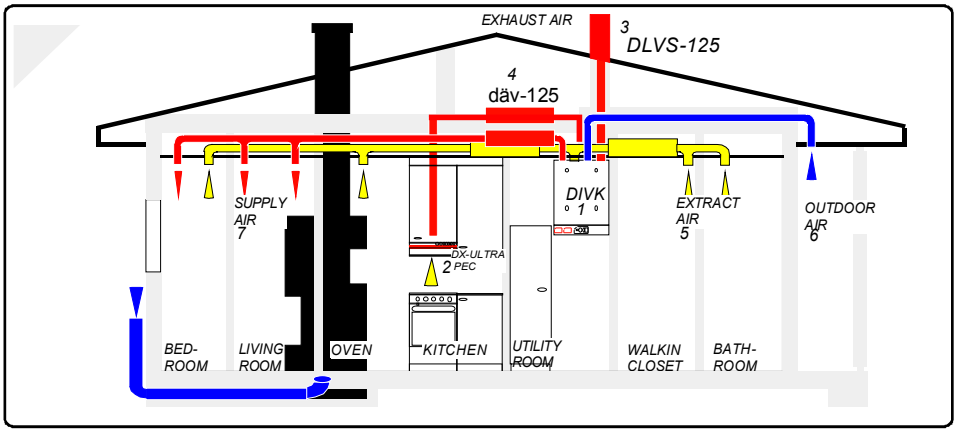


*Picture 1: System components.*

*MACHINEPARTSAND TECHNICAL DATA*

1 Exhaust air out..... Ø 125 mm
2 Outdoor air for the system..... Ø 125 mm
3 Exhaust air for the system..... Ø 125 mm
4 Interior air supply.....Ø 125 mm
5.Kitchen exhaust ……Ø 125 mm
6 Door switch
7 Supply fan, adjustable…….EC 163 W
8 Exhaust fan, adjustable.....EC 163 W
9 Heat exchanger
10 Post-heating, adjustable...500 W
11 Pre-heating, adjustable 1000 W
12 Exhaust air filter....G3
13 Supply air filter F7
14 Exhaust of condensing water
15 Operating panel
16 Manual over heat protection, pre-heating
17 Manual over heat protection, post-heating
18 Feezing protection

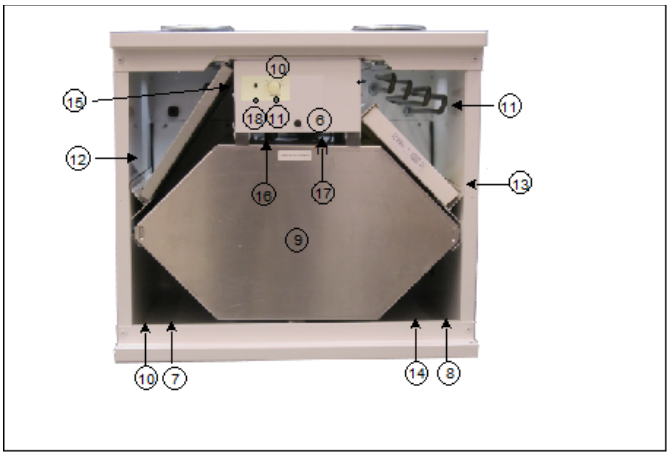


*Picture 2: Right handed(R) model of TALTERI DIVK-C 95.*

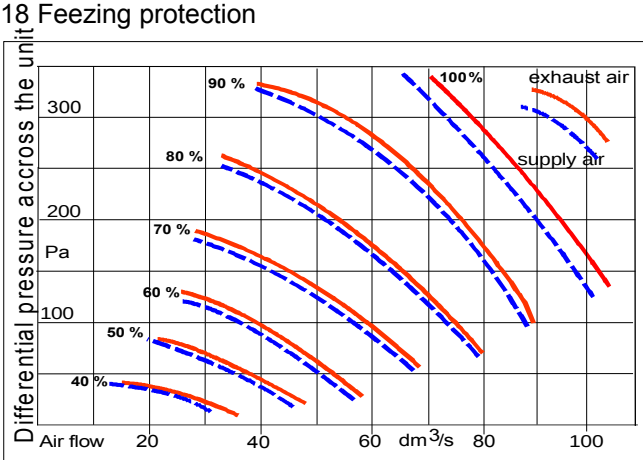


Dimensions: Height 495mm, Widh 558mm, Depth 525mm, Weight 51kg

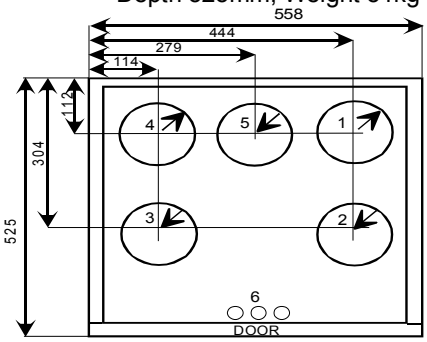


DUCT CONNECTIONS, HANDEDNESS RIGHT
1 EXHAUST AIR
2 OUTDOOR AIR
3 EXTRACT AIR
4 SUPPLY AIR
5 KITCHEN EXHAUST

Duct connections, handedness left
4 EXHAUST AIR
3 OUTDOOR AIR
2 EXTRACT AIR
1 SUPPLY AIR
5 KITCHEN EXHAUST

6 ELETRICAL CABLE PASS-THROUGHT

Kitchen exhaust air flows

| adjusting voltage | % | 40 | 60 | 80 | 100 |
|---|---|---|---|---|---|
| kitchen exhaust airflow rate | $dm^3/s$ | 34 | 51 | 69 | 85 |
| Total output | $L_{WA}$ | 50 | 59 | 66 | 70 |

*Picture 3: Performance data and dimensions of DIVK-c95.*

# AIR EXCHANGE PLAN

THE *AIR EXCHANGE PLAN INCLUDES ATLEAST:*

DRAWINGS-plans and sections (1:50) as well as installation drawings (1:20).The drawings must include at least the location of equipment and channels, measures, technical data, air flow and operational chart. For air flow measuring, the installation must be slightly under pressurized.

EQUIPMENT and QUANTITY LIST presents all work-influencing mechanical details with detailed characteristics (equipment list, noise reducers, fans etc.).

INSTALLATION MANUAL describes installation procedures for the central engine and equipment. Type-approved machinery has detailed installation instructions enclosed to the air exchange plan.

WORK SPECIFICATION specifies contract limits and timetable for the working order. Drawings, lists and installation instructions define IV-work in detail and do not need to be repeated. Work specification defines necessary testing, measuring and basic adjustment with proceeding reports.

THE REQUEST FOR QUOTATION includes total pricing considering on schedule installation according to the plan payment conditions are also extremely important.

IMPLEMENTATION- AND MAINTENANCE TRAINING is mandatory before the work is ready for handover.

*Table 1 Extract and outdoor airflow rates.*

| EXTRACT AIR FLOW | Normal operating situation | Basic operating situation |
|---|---|---|
| Kitchen | 25 $dm^3/s$ | 8 $dm^3/s$ |
| Bathroom | 15 “ | 10 “ |
| WC | 10 “ | 7 ” |
| Clothing room | 3 “ | 3 “ |
| Utility room | 15 “ | 8 “ |
| Sauna | 2 “/$m^2$ | 6 “/$m^2$ |
| Hobby room | 0.5 “/$m^2$ | 0.5 “/$m^2$ |
| Bed rooms | 0.5 “/$m^2$ or 6 “/person | 0.5 “/$m^2$ 6 “ /person |
| The airflow of the basic operating situation can be used only if it is possible to increase the airflow in the with the control valve to the level of the normal operating situation. A separate exhaust valve is required near the ceiling in the kitche | | |

| OUTDOOR AIR FLOW | |
|---|---|
| Living room | 0.5 $dm^3/s/m^2$ |
| Bed room | 0.6 “ “ or 6 $dm^3/s$/person |
| Dining room | 0.5 “ “ |
| Hobby room | 0.5 “ “ |
| Sauna | 2 “ “ at least 6 $dm^3/s$ |
| To avoid damages caused by humidity the outdoor airflow has to be at least 85 % of the exhaust airflow. | |

# INSTALLING THE CHANNELLING

The channels for exhaust air and incoming air should be installed, if possible, in a warm space below the vapour barrier to suspended ceilings or casing. The vapour barrier remains intact and the channels do not need heat insulation. This also ensures that the airflow in the channels will not freeze due to poor heat insulation as well as there will be no water condensing. Cleaning of channels also is easy. The outside air and exhaust air channels are isolated under warm conditions, see the instructions.

The channels are compiled of type-approved, rubber gasket parts and winded joint channel. All cut surfaces should be deburred for better sealing and noise reduction reasons. Connections will be secured with closing drawstrings and channels attached securely to the framework with mounting strings so it will persist also clean.

Measuring- and regulation equipment of airflow are installed to exhaust channels after noise deductors and inflow channels before the deductors. For cleansing, a cleansing hatch should be installed. Remember, that a good functioning channel is: measured correctly, hermetic, carefully attached, properly isolated and with hermetic inlets!

THE SYSTEM IS ONLY AS GOOD AS ITS WEAKEST PART IS!

CHANNEL ISOLATION

Since the channels are mounted to the upper base, it must be carefully isolated so that: humidity will not condensate on pipe surfaces, the air will not freeze before heat has been recovered, the heated incoming air will not freeze before it is blown into interior.

The two main rules of channel isolation are:

The warm air channels are always isolated in outer conditions with at least 10 cm of mineral wool and windscreen plating. The cold air channels are always isolated in inside premises with 8 cm of mineral wool and steam barrier plating, for instance AE-chase or AIM-mat (Picture 4).

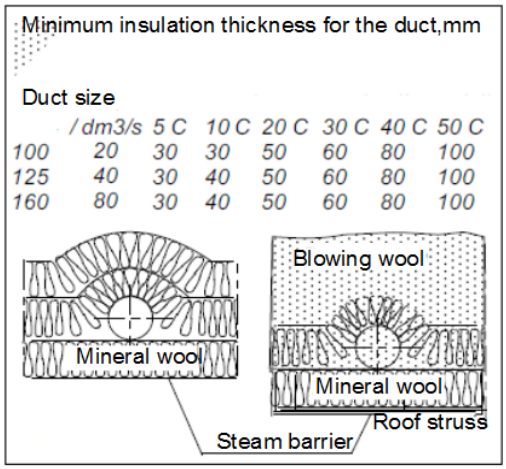


*Picture 4: Channel isolation.*

## CHANNELS OF OUTSIDE- AND EXHAUST AIR

The outside air will be obtained through a grate without an insect net. The air inlet will be situated to as clean space as possible, far from the refuse discharge, smokestack, ventilation outlet and exhaust air tube. The air inlet should be located to a height of at least 2 meters from ground on the northern side of the building, opposite side to the passing traffic. Due to warm summer weather, the outlet channel has to be thermally isolated in a loft space. Outgoing exhaust air should be channelled above the rooftop through well-isolated channel and by 700-900mm high isolated roof duct (Picture 5).

Fireplaces like hearths, ovens and sauna heating systems must have a separate isolated combustion air channels with slide coping.

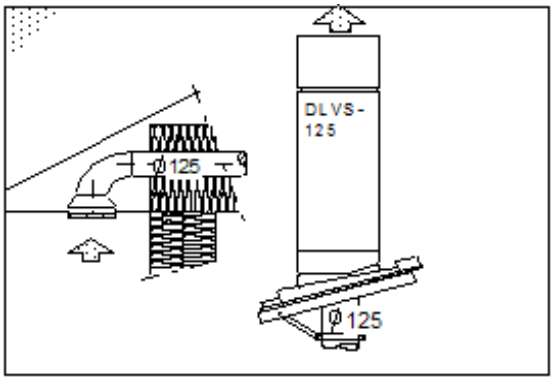


*Picture 5: .Outside and exhaust air inlets.*

INSTALLATION OF VENTS

Income and outlet vents should be installed according to the plan. Special attention is needed while installing income valve, since a wrong vent in a wrong place and wrong mounting will affect the air draught and diminish a satisfactory result.

Steam barriers should be well tightened.

In saunas, the income air is channelled above the sauna stove and outlet will be taken from underneath the sauna platform. The sauna vents are manually adjustable.

In kitchens, the outlet appliance should be the stove hood with adjustment plate of three positions and an airflow gauge. The exhaust vent is operated by the means of the adjuster. The kitchen exhaust should be attached to the air exchange unit.

In case sound isolation is needed between the separate rooms, cushioned air transfer vents are used, picture 6. Air transfer routes in doorways and under the doors will greatly reduce the privacy.

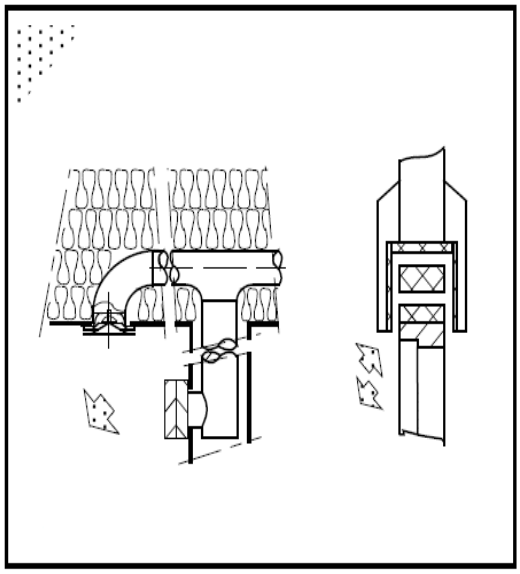

*Picture 6: Supply and transfer air vents.*

# TALTERI DIVK-C95 INSTALLATION

The air exchange unit is meant for warm inner facilities. Suitable installation spots are, among others, office, dressing or household facilities and technical or warm storage places. In case the temperature of the installation location is lower than room temperature, the factory settings of the appliance must be changed accordingly. The unit can not be installed into cold outer premises or garages.

## UPPER BASE DUCT

The channelling is usually mounted to the upper base thermal insulation. The steam barrier puncture must be carefully sealed. While installing the unit to channels, steel steam barrier plate, supplied as an extra, will come handy. The steam barrier plate is attached securely between the roof trusses; 10mm smaller hole must be cut in the gasket mat and the channels should be installed through the plate.

The steam barrier must be hermetically taped.

The unit can be attached right to the steam barrier plate with four M8 thread bars at desired height.

Note the measurements of the steam barrier plate during the installation process.

The bolts and thread bars should be purchased separately.

## MOUNTING ON THE WALL

The unit can be attached to a wall with a mounting plate. First, the wall mounting plate should be fixed to the wall approximately 25 mm under the ceiling and then the unit should be lifted up to the mounting plate, checked and adjusted into a perfectly horizontal position. After that holes for the screws should be drilled though the bottom of the unit. If necessary, additional trimming can be installed on the upper edge of the unit, if necessary, to mask the gap between the unit and the ceiling.

## KITCHEN EXHAUST DUCT

If applicable, duct connection number five(5), see page 6, should be connected to a duct of a kitchen exhaust fan hood. If a duct is not in use, this connection of the unit should be closed with a plug.

## CONDENSATE DRAINAGE

Condensate water hose is connected to the condensate drainage outlet (3/8 female screw). You can use a diameter of 10 mm copper pipe or from a rigid hose as a condensate water hose. When installed, the hose should form a U-shape water trap (appr. 10 cm curve) and then be connected to a floor well(Picture 7). It is not allowed to connect the hose directly to a sewer.

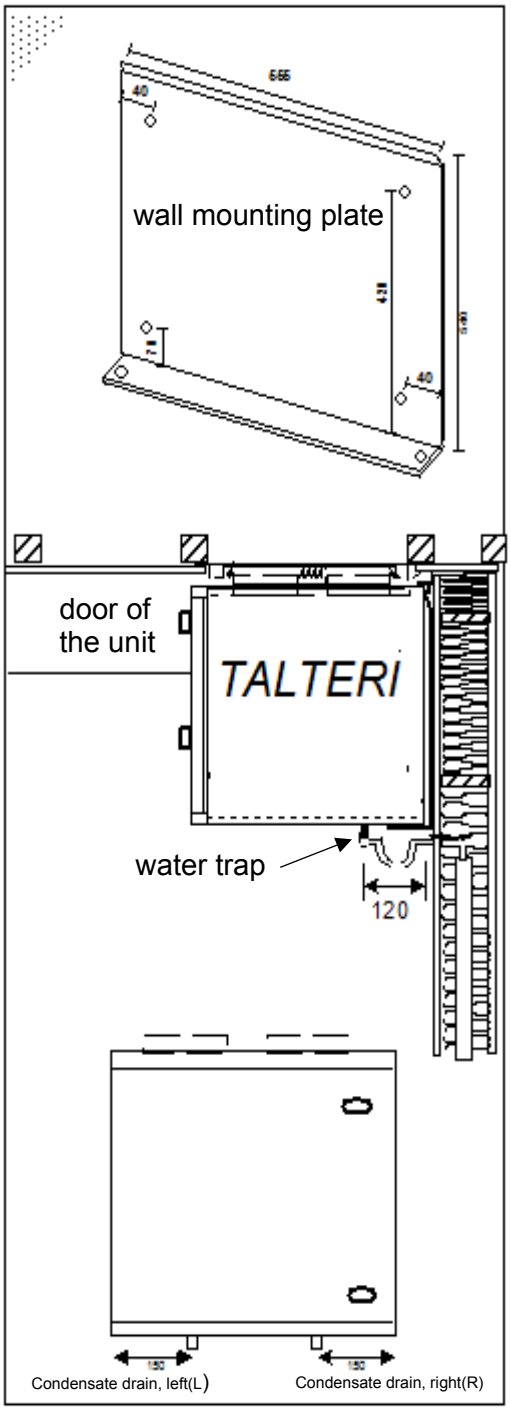


*Picture 7: TALTERI DIVK.-C 95 installation.*

## CHANGING HANDEDNESS OF THE DOOR

The handedness of the door can be changed by pushing the pintle (located on the top or bottom of the unit) with, for example, a narrow headed screwdriver(Picture 8).

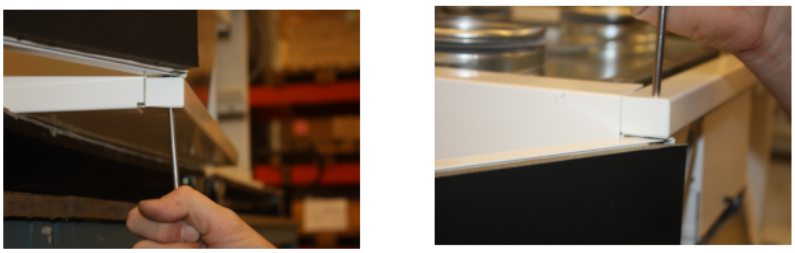

*Picture 8: Changing handedness of the door.*

# DIVK-C 95 INSTALLATION TO A SUSPENDED CEILING

The ceiling-mounting plate is attached
to the roof with M8, thread bars (not included in the delivery).

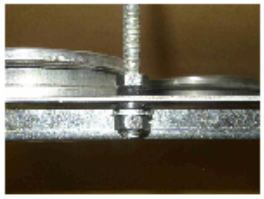

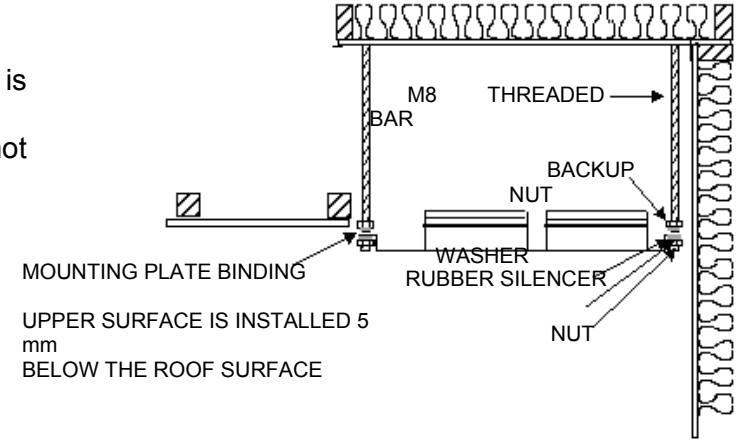


The head of the threaded bar can not reach below the bottom of the plate.

The unit will be pushed to the mounting plate and
tightened with four M8 bolts against the plate.

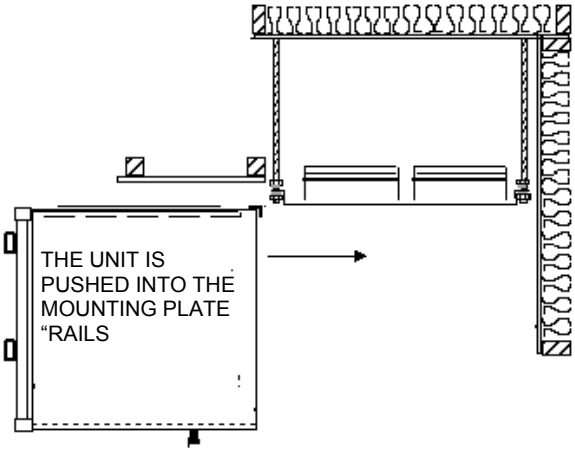


MEASURES OF THE MOUNTING PLATE

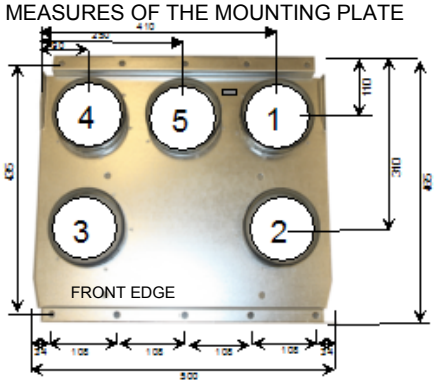


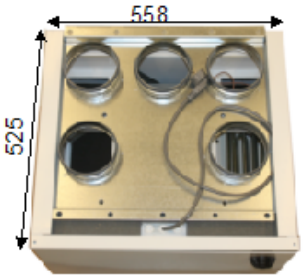


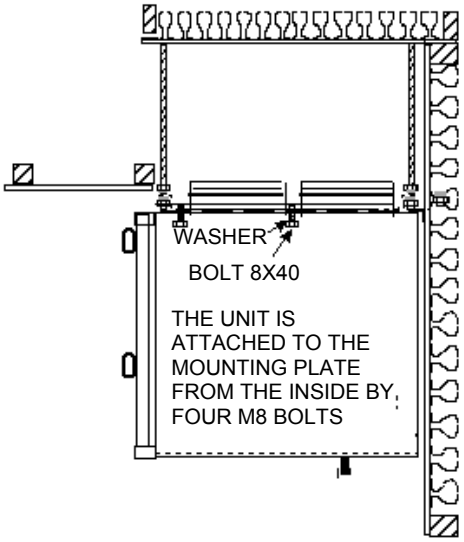

# ELECTRICAL CONNECTIONS

Electrical connections must be done following the installation manual and wiring scheme.
*ELECTRICAL CONNECTIONS CAN BE DONE ONLY BY AN ENTREPRENEUR WITH RESPECTIVE INSTALLATION RIGHT*

The power supply is connected to the air ventilation machine's connectors 3(L) and N(N) , pre fuse max. 10A.
The voltage for the kitchen hood is taken from the air ventilation connectors 1(L1) and N(N).
The voltage to the post-heater's connector LL is brought from the kitchen hood.
The control voltage (0-10v) for the fans is brought with a separate cable from the kitchen hood. The scheme of the electrical connections are shown in the Picture 9.

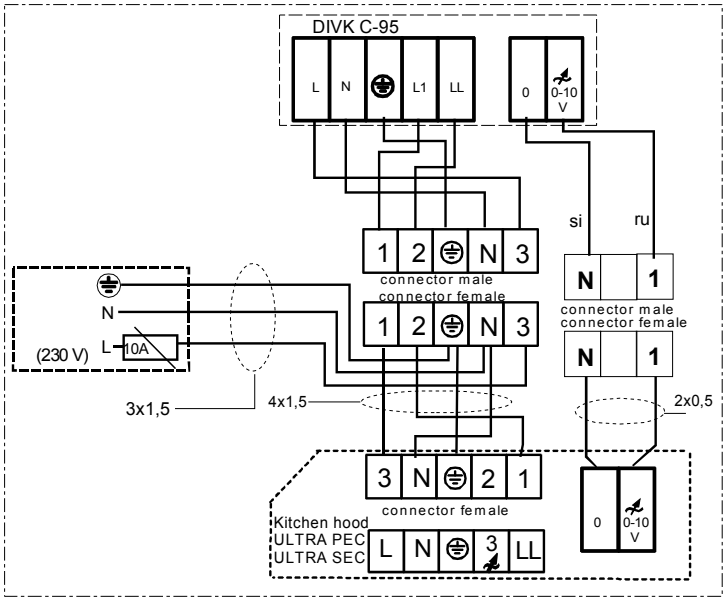


*Picture 9. Electrical connections.*

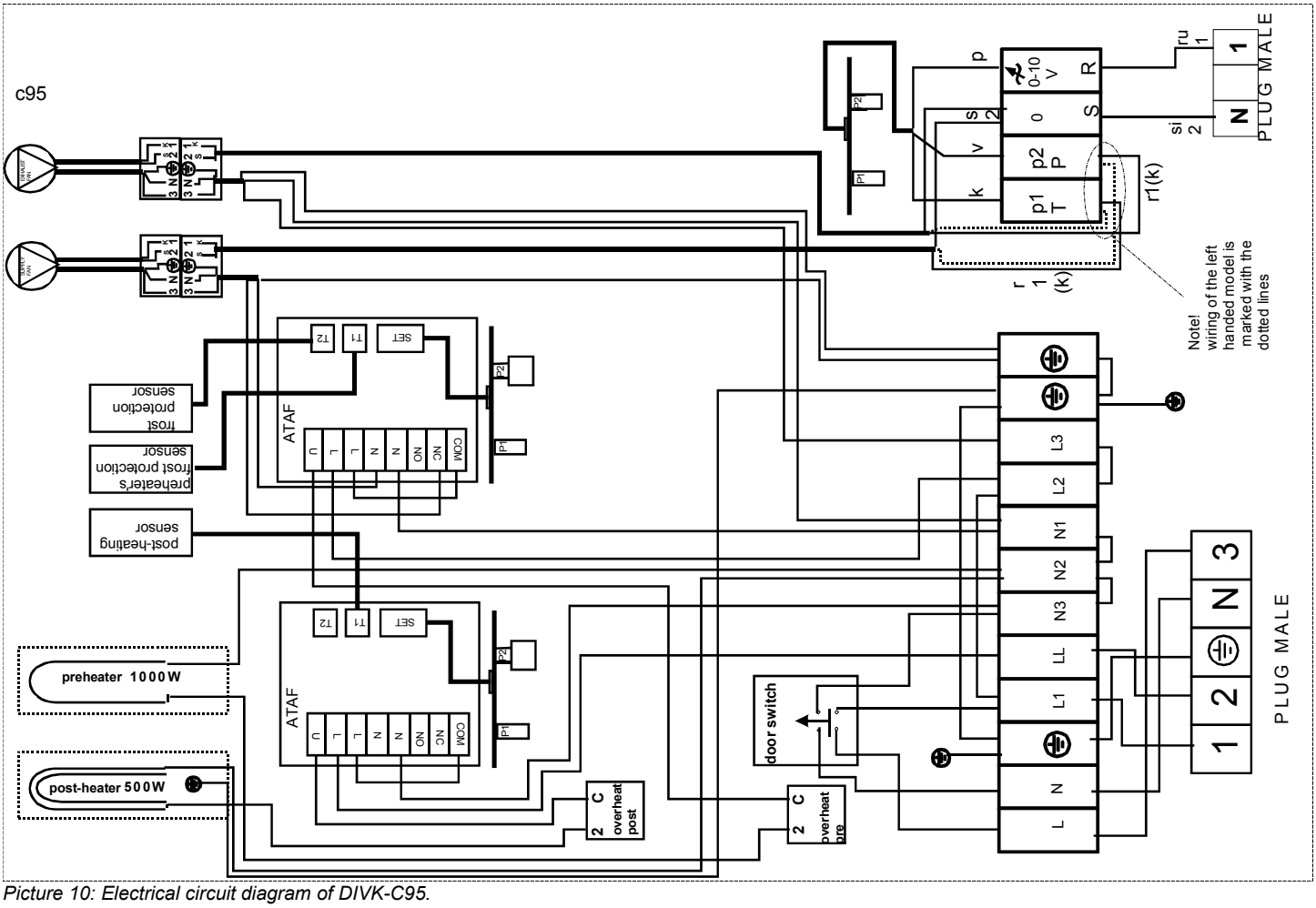


*Picture 10: Electrical circuit diagram of DIVK-C95.*

# INTRODUCTION OF THE AIR EXCHANGE

*BEFORE OPERATING YOUR AIR EXCHANGE SYSTEM, MAKE SURE THAT:*

- There are no loose objects within the unit or the air impeller;
- The coverings of construction-time are removed from the outlet- and exhaust air holes;
- All isolations and steam barriers are in order;
- The heat transfer and fans are in their places;
- The condensing water outlet is installed and the water is drained out;
- The air impellers and their adjusters are in working order;
- Post-heating is regulated and working.

*USAGE DURING INSTALLING*

The air exchange unit should be started as soon as installation permits.
Efficient air exchange promotes drying of the constructions and prevents damage. In case channeling has not been completed, fans and adjustments are missing, filter paper must be used instead of fans to keep the channels clean and provide sufficient counter pressure preventing overload. The unit must be used with full power and check the drainage of the condensing water. The appliance, filters and heat exchangers must be cleaned and the system adjusted after the construction works are completed.

*BASIC ADJUSTMENT OF AIRFLOW*

The unit alone can not produce good interior air in case the channels and fans have been installed carelessly and main adjustments have not been made. Regulate the inlet and outlet fans to the planned positions and start the unit at design power speed. Measure the airflow in outside- and exhaust air channels. The outlet must be 10-25% higher than inlet. Check the pressure level of the channels by checking the fans and adjust it accordingly to obtain the pressure level of 20-30 Pa for vents.Adjust and lock the flowpattern. Make measuring- and adjustment records!

ADJUSTMENT OF SUPPLY AND EXHAUST AIRFLOWS RATIO

If needed the control voltage of the supply and exhaust fans can be regulated during the basic adjustment of airflow by the potentiometers located under the lid of the electrical enclosure of DIVK-C95(Picture 11 ).
Voltage of the second fan can be reduced 0-21% by turning the switch clockwise . This setting should not be altered after the airflows are adjusted(Picture12).

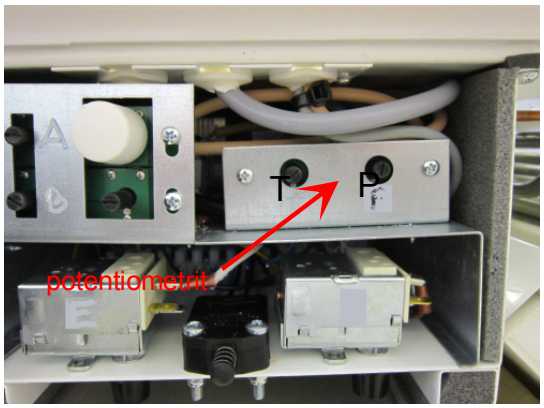


*Picture 11: Location of the potentiometers(T=supply,P=exhaust).*

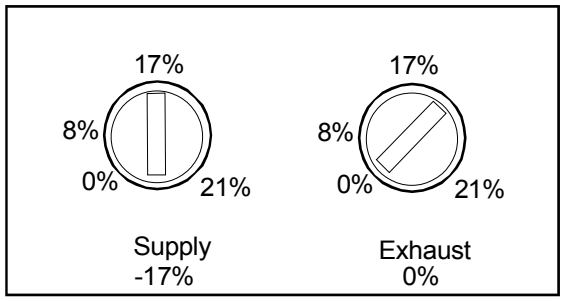


*Picture 12. Adjustment of the supply and exhaust airflows ratio.*

*USAGE AND CORRECT LEVEL OF AIR EXCHANGE*

The air exchange level is regulated by changing the working speed of the air impeller from the operating panel. Airflow of different adjustable positions can be seen from table 1

Adjustable position 1 is for basic air exchange for an empty house.

Adjustable position 2 and 3 are normal working positions.

Adjustable position 4 and 5 are efficiency positions (i.e. for saunas).

The correct usage positions could be found out from personal observation of the purity of the air or sultriness when coming in from outside, observing moisture on the windows or drying of the sauna.

*POST-HEATING AND SUMMER BYPASS OF INLET AIR*

The unit is equipped with 500W electrical battery operated by the means of TRIAC-adjuster for post-heating the heat recovered inlet air.

The temperature of inlet air is usually regulated to +16C. The temperature may be adjusted to higher during winter so there would be no draught like feeling. In case of severe frost and efficiency mode the heating power might turn out insufficient in such circumstances, the air exchange should be reduced. The overheating protection launched during malfunctioning must be annulled manually.

During summer, the summer bypass plate will be opened so that the exhaust air will not warm up an inlet air. When the summer bypass plate is in use, the thermostat of the post-heater is set to 0.

*CONDENSING WATER AND FREEZING PREVENTION*

When outlet air freezes, the humidity in LTO-exchanger condensates flows down to the condensing basin and from there, through the hose and water trap, into the open drain.

DIVK-C95 has double freezing protection: the preheater heats an outdoor air and/or freeze protection thermostat operates the supply air fan in cycles during the defrosting cycle.

Temperature value of freezing protection is measured from exhaust air temperature.

Default setting for the preheater is approximately +5 C°.

Default setting for the defrosting thermostat is approximately +0 C°.

Difference between the temperatures of the preheater and the freezing protection should be 2-5 Cº

During harsh frosts in winter and when humidity is too high the LTO-element may freeze .To avoid it defrosting cycle can be activated earlier by rising the set temperature value of the defrosting thermostat (by turning the switch clockwise).

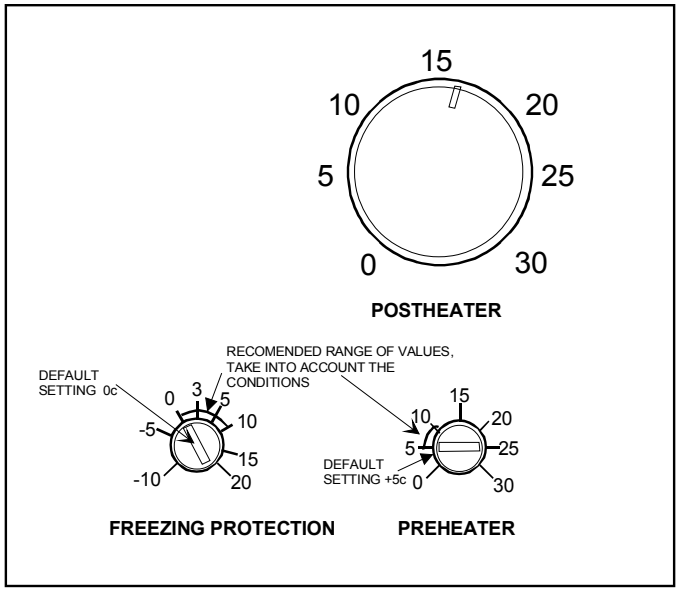


*Picture 13: Post-heating and freezing protection of DIVK-C95.*

*REMOVAL OF THE FANS*
*The fan can be removed for cleaning or replacement. To do that, the heat exchanger core and the filters should be removed. Cover plate located at the front of the fan should be removed by loosening the fastening screws(2 pcs.).Electricity connectors of the fans should be disconnected. Then the fan can be finally removed from the case by unscrewing its mounting plate from the case.*

Fastening screws of the cover plate of the fan.

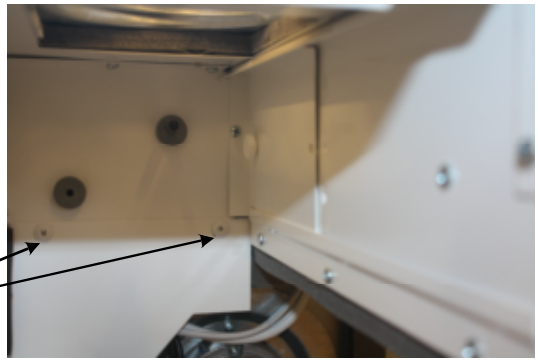

*Fastening screws of the cover plate of the fan.*

*Picture 14: Removal of the fans.*

*OVERHEATING PROTECTORS*
*The overheating protection is activated in case the barrier temperature has risen to +90 C (for instance, in case of power failure).Reset the overheating mode by pressing the switch under the threaded contact protection.*

*Overheating protector of the pre-heater.*

*Overheating protector of the post-heater.*

*Picture 15: The location of the overheating protectors.*

For producing good indoor climate continuously, the air exchange systems require regular maintenance.

The metallic grease filter of stove hood must be kept clean at all times for fire safety reasons. Cleansing with hot water or in a dishwasher once a month is absolutely mandatory. Substances used in machine washing may darken the aluminium parts of the filter.

The inlet and outlet filters of Talteri must be cleansed at least twice a year. The coarse filter-s plastic lasts washing temperature of up to +40C.

The final filter F7 can be vacuumed only once. It needs to be replaced next time when it gets dirty after that.

During summer time, when room temperature rises, the summer bypass plate can be set to 'Summer' position, ensuring inflow of fresh and clean external air (see the pictures 16 and 17).

LTO-exchanger will be pulled out of the unit and washed thoroughly in autumn just before the heating season begins - the heat recovery will then be at its best.

Turn the post-heaters switch to the position 0.

Check the condition of sealing and push the transmission back to its place.

The inner painted walls of the unit are easy to clean. Check the condition of sealing, clean the outlet hose of condensing water and make sure the water flows freely and without any obstructions.

The impellers, air exchange adjusters and thermostats are components that do not require regular maintenance.

Electrical works can be carried out only by a qualified electrician.

*SUMMER BYPASS PLATE*

*Summer bypass plate is located under the exhaust air filter.*

*Picture 16: Summer bypass plate in the summer position.*

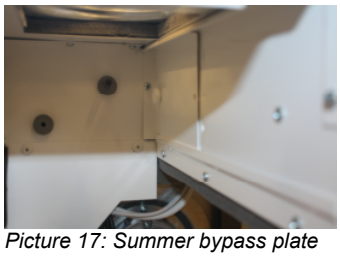

*Picture 17: Summer bypass plate in the winter position.*

## MALFUNCTIONS AND FAULT ALERTS

| ***NO SUCTION BY OUTLET AIR IMPELLERS AND / OR INLET AIR IMPELLERS DO NOT BLOW AIR.*** | |
|---|---|
| *Check if :* | *IF NOT !!!* |
| The air conditioner is switched on | Switch on the air exchange |
| The conditioner adjuster is in the position 2 | Try working with position 3-4. Check the normal functioning mode |
| Air exchange unit's fuse in the electrical chart is undamaged | Replace the fuse or turn it on |
| The impellers are in the right position and pre-set | Consult with the installer, check the records |
| The filters and LTO-elements are clean | Clean filters and LTO-elements according to the instructions |
| The external air grate is clogged | Clean the grate<br>Remove the insect-net |
| The external air is too cold and the unit is set on just chilly | Freezing cover has stopped the inlet impeller |
| ***INLET AIR IS COLD*** | |
| *Check if:* | *IF NOT !!!* |
| The post-heating of the inlet air is turned on | Turn the post-heating on or set the inlet air index value higher |
| The heat recovery unit is frozen | Check, turn on the fusion phase |
| Post-heating resistance overheat protection is working | Open and reset the protection |

CHECKING THE FUNCTIONING OF OUTLET AND INLET IMPELLERS
Stop the machine, open the door fastened with four star dogs.
In winter, you should let the machine to cool for a moment.
Use the machine on slow speeds, state the speed changes.
DO NOT TOUCH THE IMPELLER WINGS WHEN THEY ARE MOVING*!!!*

The performance of inlet impeller is decreased or stopped by the freeze-alert thermostat when the temperature of the exhaust air reduces below set value (5c).
The inlet impeller starts again when the temperature of the exhaust air rises above the set value.

The channels must be checked if the impeller works but the air exchange is inadequate or the temperature changes in the channels between the interior and the machine. Temperature changes and increased humidity in channels must be prevented by improving the isolation.

During harsh frosts in winter, the equipment must be used on lower speed so the post-heating will last and there will be no draught. Under extreme conditions (humidity / harsh cold) the LTO-element may freeze over and the

anti-freeze protection series are not able to defrost it. If such a case occurs, the machine has to be stopped, opened and the cold flow stopped and the ice given the necessary time to melt. Check the drainage of condensing water!
In case the water-lock dries out and makes pulping noise, you can pour a drop or two of cooking oil.

In really cold weather, the head recovery unit heats the preheated inlet air with post-heating. Correct functioning can be checked by comparing the temperature of inlet air to the set value of the inlet air post-heating.
Heating of resistance can also be determined by careful checking from the open machine running on slow speed.

The overheat protection has been activated in case the barrier temperature has risen +90 C (for instance, in case of power failure). Reset the overheat temperature by pressing the switch under the threaded contact protection (see page 10).
Ask a qualified electrician to check the wiring.

***PLEASE REFER TO DEEKAX MAINTENANCE SERVICE FOR ANY FURTHER INFORMATION OR ASSISTANCE***